Int. J. Hydrogen Energy, Vol. 16, No. 5, pp. 349–352, 1991.
Printed in Great Britain.

0360–3199/91 $3.00 + 0.00
Pergamon Press plc.
© 1991 International Association for Hydrogen Energy.

DESIGN OF A PHOTOVOLTAIC-HYDROGEN-FUEL CELL ENERGY SYSTEM

P. A. LEHMAN and C. E. CHAMBERLIN
Department of Environmental Resources Engineering, Humboldt State University, Arcata, CA 95521, U.S.A.

(*Received for publication* 2 *January* 1991)

Abstract—The design of a stand-alone renewable energy system using hydrogen (H_2) as the energy storage medium and a fuel cell as the regeneration technology is reported. The system being installed at the Humboldt State University Telonicher Marine Laboratory consists of a 9.2 kW photovoltaic (PV) array coupled to a high pressure, bipolar alkaline electrolyser. The array powers the Laboratory's air compressor system whenever possible; excess power is shunted to the electrolyser for hydrogen and oxygen (O_2) production. When the array cannot provide sufficient power, stored hydrogen and oxygen are furnished to a proton exchange membrane fuel cell which, smoothly and without interruption, supplies the load. In reporting the design, details of component selection, sizing, and integration, control system logic and implementation, and safety considerations are discussed. Plans for a monitoring network to chronicle system performance are presented, questions that will be addressed through the monitoring program are included, and the present status of the project is reported.

INTRODUCTION

A stand-alone solar energy system must have provision for energy storage; one attractive option is use of hydrogen as the energy storage medium. Whenever the system has excess energy available, it is stored by production of hydrogen gas via electrolysis. The hydrogen can then be used directly as a fuel or electricity can be regenerated through use of conventional thermal power cycles or, in one step, through use of a fuel cell.

There are several advantages to the use of hydrogen. Hydrogen has the highest energy storage per unit mass of common fuels. It is easily transported via pipeline and plans are being formulated to transport it as a liquid by ship [1]. Standby energy losses are very low. Finally and most importantly, hydrogen is an almost ideal fuel in terms of its effect on the environment, producing almost no toxic emissions and contributing no greenhouse gasses to the atmosphere.

In the discussion which follows a stand-alone power system which uses hydrogen to store solar energy is considered. The design of the system and the development of the control and monitoring systems is described.

DESIGN PROCESS

The load for the PV-H_2-fuel cell system is the Telonicher Marine Laboratory's air compressor which supplies pressurized air to fish tanks. This is a continuous load of 720 W. The solar resource is characterized by an average daily insolation of 13.8 MJ m^{-2} and is chronicled in a SIMP (solar insolation monitoring project) weather file obtained from Pacific Gas & Electric Co. The file contains hourly data for solar insolation and ambient temperature. The load and solar resource serve as constraints on the design.

The basic system configuration is shown in Fig. 1. PV array power is used to run the load whenever possible and only excess power is directed to the electrolyser for H_2 and O_2 production. This requires that the control system continuously monitor how much power is being produced by the array and direct the correct fractions to the load and the electrolyser. Whenever PV power is insufficient to run the load, the fuel cell is activated and generates power by drawing upon stored H_2 and O_2. Whenever stored H_2 and O_2 are unavailable, the load is returned to utility power.

A simpler system would be to direct all power to the electrolyser and run the load only via the fuel cell. This would, however, reduce system efficiency markedly since at least 50% of each kWh of electrical energy is lost as it passes through the electrolysis–fuel cell storage cycle. It would also be simpler to vent the oxygen and use air as the oxidant source for the fuel cell. This would reduce fuel cell efficiency significantly (probably by about 25%) and thus also reduce overall system efficiency. In an effort to maximize overall efficiency, these simplifications have not been made.

The next design step is rough sizing of the PV array. Average daily insolation values for each month were used to calculate PV array performance for a range of array areas, making the following assumptions:

- PV efficiency = 10%;
- electrolysis efficiency = 70%;
- fuel cell efficiency = 60%;
- overnight storage of H_2 only.

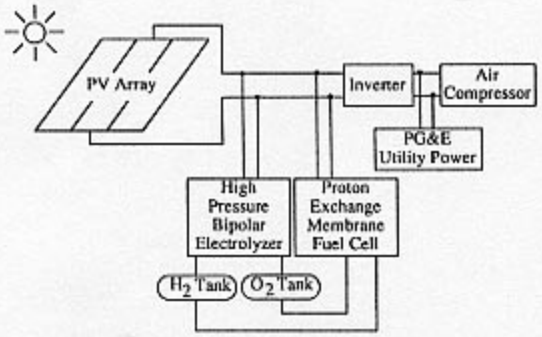

Fig. 1. Overall schematic of PV-H_2-fuel cell energy system.

These calculations yielded results summarized in a graph of % demand met (that fraction of the load supplied by solar energy) versus array area as shown in Fig. 2. The desired performance range was chosen to be between 75% and 90% of demand met. This range is a balance between a system large enough to provide the bulk of the demand, yet not so large as to be prohibitively expensive. This yielded an array size of between 60 and 95 m^2. Note that to approach 100% of demand met, an array approximately twice as large would be necessary.

An important design consideration is the match between the current–voltage (I–V) characteristics of the PV array and the electrolyser. If the electrolyser is connected directly to the array, it must operate near the maximum power point of the array or power will be lost. However, it is important that the electrolyser voltage not be much larger than the maximum power point voltage or array output will drop precipitously. Allowance must also be made for voltage drops in the array circuitry and for an increase in electrolyser voltage as the cells age. These relationships are summarized in Fig. 3.

Curves in Fig. 3 were generated with the following assumptions:

- the PV array consists of 192 Arco/Siemens M75 modules configured in 96 series pairs (to yield a nominal 24 V system);
- the electrolyser is a Teledyne Energy Systems Altus 20 with 12 cells in series.

Component selection began with the electrolyser. The Altus 20 is the only commercial electrolyser readily available in about the correct size which supplied already pressurized gases (thus eliminating the need for supplementary compression). Its 6 kW capacity matched the load well and its I–V curve matched the proposed array well.

The Arco/Siemens M75 modules were chosen because of their excellent efficiency and because of the match with the electrolyser. Total array area was chosen to be 77.3 m^2 (192 modules), approximately in the center of the range of array sizes given in Fig. 2. As can be seen in Fig. 3, the match between array and electrolyser is somewhat conservative in that the operating points are at lower voltages than the maximum power voltage. This choice allows for voltage drops in the circuitry and other diminutions in performance such as mismatch loss, dirt on the module surfaces, age degradation, etc. We should also point out that Fig. 3 is based on data supplied by the manufacturers. These data are generally optimistic. To minimize mismatch loss in the array, all the PV modules were tested and it was found that 95% of the modules (nominally rated at 48 W) produce less than 45 W. None produces 48 W. These results will be reported [2].

Significant work has been reported by the Hysolar project [3] on the enhancement in performance that is achievable by tracking the maximum power point of the array and then using d.c. to d.c. voltage conversion to match the electrolyser voltage. Though enhancement is possible, its small magnitude plus the extra complexity and cost led us to choose direct coupling for our system.

The next step is to size the storage. To do this, system performance was simulated hour by hour using an interactive simulator, PVINTER. It is based on the design program PVFORM and was developed here at Humboldt State University [4]. A SIMP weather file for nearby Eureka, CA obtained from PG&E furnished hour by hour insolation and temperature data and was used to determine the power on the array (POA). The algorithm used for each hour in these calculations is shown in Fig. 4.

The result of this simulation was a graph of performance (in terms of % demand met) versus storage size.

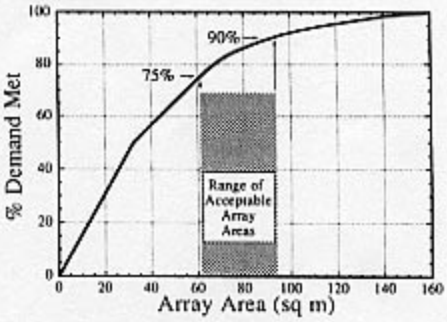

Fig. 2. System performance versus PV array area.

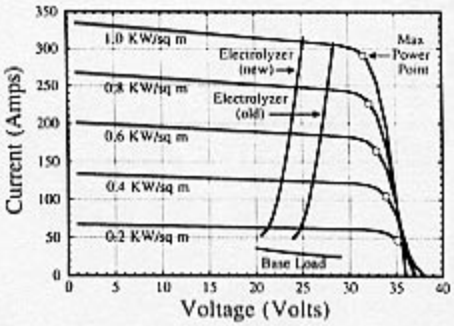

Fig. 3. Current–voltage curves of the PV array, electrolyser and load.

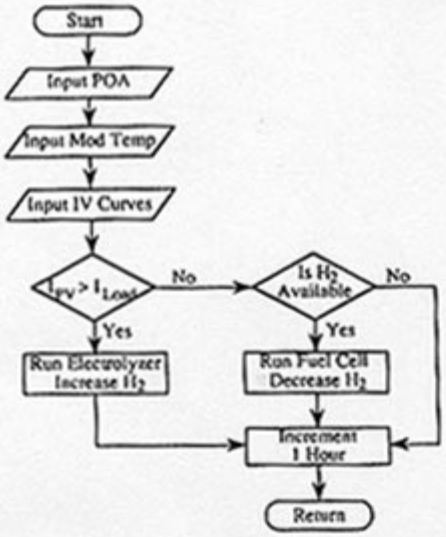

Fig. 4. Simulation algorithm used to size hydrogen storage.

This is shown in Fig. 5. The H_2 storage tank is assumed to contain H_2 gas at 750 kPa pressure, the maximum output pressure of the electrolyzer. The O_2 storage tank is half as large. The critical period in determining storage size was December–January.

A storage size of 3.8 m^3 was chosen. As can be seen, this is large enough to yield a system which will satisfy almost 80% of the demand, while a larger storage capacity would provide very small return in terms of enhanced performance. This size is also conveniently available as a 1000 gallon tank. We chose not to pursue the possibility of hydride storage for this system because of the simplicity of compressed gas storage and the fact that the space savings achievable with hydride storage were not a particular advantage in our application.

The fuel cell was then selected. In order to integrate successfully into the system, it must possess:

- the ability to respond very quickly (within seconds) to a demand for power;
- high efficiency;
- moderate operating temperature;
- proper output power range and reasonable physical size.

An Ergenics Power Systems 1.1 kW proton exchange membrane (or solid polymer electrolyte) fuel cell was chosen. Most importantly, this cell is able to respond to load demands in less than 1 s. It also exhibits efficiencies greater than 65% which will contribute to a high overall storage efficiency and operates at approximately 70°C, thus requiring only air cooling. Finally, it is available with a power rating of 1.1 kW, a size which is comfortably above the load demand of 720 W but not grossly oversized.

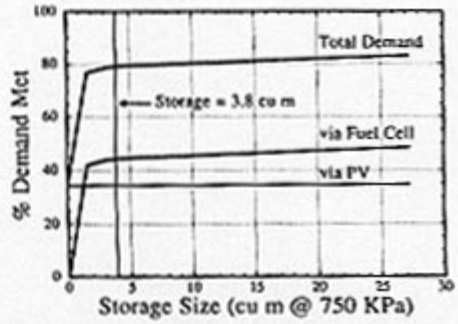

Fig. 5. Performance versus size of hydrogen storage.

CONTROL SYSTEM

This system is being designed for unattended operation. A computer system is under development which will handle all control and safety functions smoothly and without operator assistance. The system will monitor (via various transducers) PV array output, H_2 and O_2 pressure, and safety interlocks dependent on the presence of H_2 gas, unusual electrolyser parameters, ventilation in the H_2 hood, and any out-of-normal-range parameters reported by the monitoring system.

The PV array is divided into 12 subarrays, each with the capability of being independently switched to the electrolyser or the load. The subarrays are kept shorted when not in use. The number of subarrays which are switched to the load and the electrolyser is dependent on the magnitude of the array current. When total array current is insufficient for the load, storage gas pressures are used to indicate whether or not the fuel cell should be used to supply load current. If both array currents and gas pressures are insufficient, the system is returned to utility power. If any safety interlock is tripped or for any other reason power is not being supplied, the system safely shuts down and returns the load to utility power.

MONITORING SYSTEM

An extensive monitoring system will measure and record performance. The following variables are included:

- temperature: PV module (3), ambient air, electrolyser, fuel cell, H_2 storage tank, O_2 storage tank;
- current: electrolyser, battery, fuel cell, inverter, a.c. load;
- voltage: electrolyser, battery, fuel cell, a.c. load;
- mass flow: H_2 and O_2 out of electrolyser, H_2 and O_2 into fuel cell;
- pressure: H_2 storage tank, O_2 storage tank;
- other: insolation, windspeed and direction.

These variables will be recorded on a real time basis. Their compilation will allow us to determine:

- overall storage efficiency;
- array, electrolyser, fuel cell, and inverter efficiencies;
- temperature behavior of the array, fuel cell, and electrolyser;
- effect of environmental conditions on system performance;
- real time behavior of the system.

Real time system behavior will be important to enable calibration of models of system performance and to optimize system efficiency.

SAFETY CONSIDERATIONS

We are striving to produce a safe system which conforms to applicable codes; this has not been easy. Efforts underway to produce international standards for hydrogen energy systems [5] are laudable and necessary. Our task would have been far easier if such standards were already a reality.

All wiring conforms to the National Electric Code [6] for photovoltaic systems. Because this portion (Section 690) of the code is still under development, we have used several sources [7, 8] to supplement information in the code. We have chosen to use a grounded system even though this is optional for low voltage (< 50 volt) systems. The configuration of the electrolyser, wherein plumbing and electrical connections are attached to the same electrode plate necessitates this choice. Grounding is crucial (especially in a hydrogen system) to avoid unwanted arcing. One aspect of grounding is worthy of note: the grounding wire must be at least as large as any other wire in the circuit. Since the electrolyser is a high current device, this requires an unusually large ground wire in a PV-hydrogen system.

We consulted several sources with regard to the safety of H_2 and O_2 gas systems, including the National Fire Protection Association (NFPA) Handbook [9] and a registered safety engineer [10]. The system we are building draws from these sources and from "accepted engineering practice". All hydrogen valves, fittings, and devices are provided with secondary confinement which is continuously vented by an explosion proof fan. Failure of the ventilation system will result in system shutdown. Hydrogen sensors are provided in the secondary confinement space and in the laboratory space. Detection of hydrogen at a level of 1.6% (40% of the lower explosive limit) results in system shutdown. Excess flow valves and pressure relief valves are provided on each of the gas storage tanks. Solenoid valves provide for automatic isolation of the storage tanks from the rest of the system if an alarm condition is indicated.

All automatic components of the electrical and gas systems are configured to fail safely in the event of a power failure. The computer control and monitoring systems are provided with independent uninterruptible power supplies so that they may continue to operate after power has failed and effect an orderly and safe shutdown.

PROGRESS TO DATE

Progress to date on the project is as follows:

- PV array, switching circuitry, and associated wiring is complete;
- laboratory building is constructed;
- electrolyser is installed;
- H_2 and O_2 plumbing and ventilation are partially installed;
- monitoring and control hardware and software are partially installed.

Still to be accomplished is:

- completion of H_2 and O_2 plumbing and ventilation;
- completion of computer hardware and software;
- installation of fuel cell;
- start-up and debugging of system.

Further results will be reported as they become available.

Acknowledgements—The authors gratefully acknowledge generous grant funding from Mr L. W. Schatz of General Plastics Manufacturing Co., Tacoma, WA; the assistance of undergraduate engineering students Tim Murphy, Gian Pauletto, Ron Reid, and Jim Zoellick; and the technical assistance of Cliff Sorensen.

REFERENCES

1. R. Wurster and A. Malo, The Euro-Quebec hydro-hydrogen pilot project. *Proc. 8th World Hydrogen Energy Conf.* Pergamon Press, Oxford (1990).
2. J. Zoellick, C. E. Chamberlin and P. A. Lehman, Mismatch losses in commercial photovoltaic modules, in preparation.
3. A. Brinner, H. Bussmann, W. Seeger and H. Steeb, Operation results of a 10 kW PV-electrolysis system in different coupling modes. *Proc 8th World Hydrogen Energy Conf.* Pergamon Press, Oxford (1990).
4. C. E. Chamberlin and P. A. Lehman, *PVINTER: An Interactive Photovoltaic System Simulator*, prepared for the California Department of Transportation (CALTRANS) (1986).
5. G. R. Grob, Implementation of a standardized world hydrogen system. *Proc. 8th World Hydrogen Energy Conf.* Pergamon Press, Oxford (1990).
6. *National Electric Code*, 1990 Handbook, 5th edition. National Fire Protection Association.
7. T. Key and D. Menicucci, Practical application of the National Electrical Code to Photovoltaic system design. *Proc. 20th Photovoltaic Specialists Conf.* (1988).
8. J. C. Wiles, Southwest Technology Development Institute, New Mexico State University, personal communication.
9. *Fire Protection Handbook*, 16th edition. National Fire Protection Association (1986).
10. C. P. Hoes, President, Hoes Engineering, Inc., personal communication.